TrynEx International, LLC, 531 Ajax Drive, Madison Heights, MI 48071-2429 • www.snowexproducts.com

October 15, 2026
Lit. No. 84719, Rev. 04

SPEEDWING™ & HD Series Skid Steer Snowplows

HD Blade Assembly 77720, 77725, 77730, 77735, 77720-1, 77725-1, 77730-1, 77735-1

SPEEDWING Blade Assembly 77740

HD A-Frame/Attachment Plate & Hydraulics 77825

SPEEDWING A-Frame/Attachment Plate & Hydraulics 77845

Parts List

A DIVISION OF DOUGLAS DYNAMICS, LLC

TABLE OF CONTENTS

SKID STEER – SPEEDWING™ BLADE 4
Blade Components 4
Quadrant Components 7
SKID STEER – HEAVY DUTY STRAIGHT BLADE 8
Blade and Quadrant Components 8
A-FRAME COMPONENTS 10
ANGLE RAM COMPONENTS 12
HYDRAULIC COMPONENTS 13

Blade Components – SPEEDWING

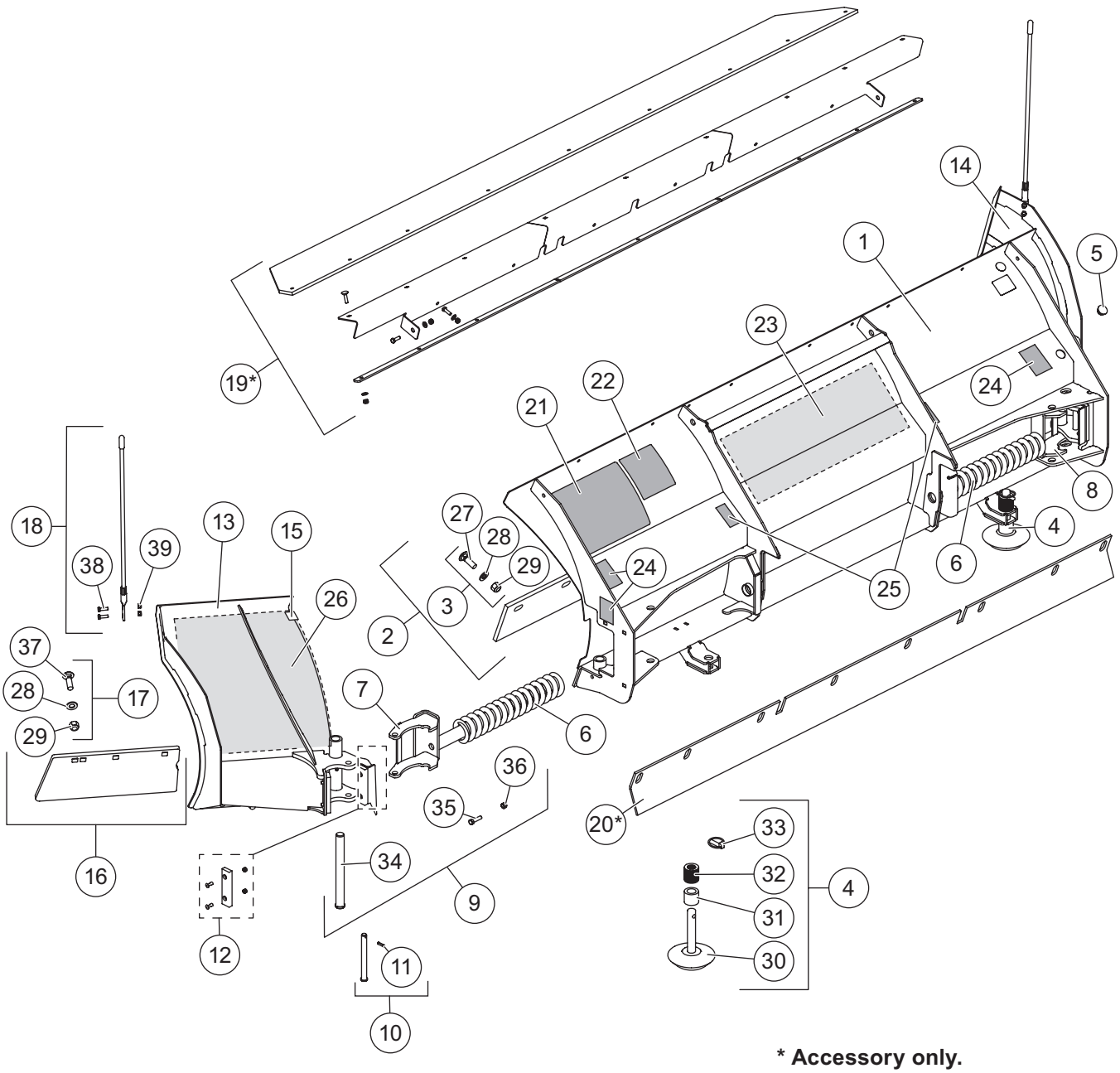

*** Accessory only.**

77740 Blade Assembly – SPEEDWING							
Item	**Part**	**Qty**	**Description**	**Item**	**Part**	**Qty**	**Description**
1	84559	1	Moldboard (w/labels)	17	84684	1	Wing Cutting Edge Hardware Kit
2	84462	1	Moldboard Cutting Edge Kit	18	84525	1	24" Poly Blade Guide Kit (set of 2)
3	41774	1	Bolt Bag – Moldboard Cutting Edge	ns	84477*	1	36" Poly Blade Guide Kit (set of 2)
4	53595	2	Plow Shoe Assembly	19*	84518	1	Deflector Kit
5	B61614	2	Plug, Ø1.00 Finishing	20*	84461	1	Back Drag Edge
6	42725	2	Compression Spring	21	84718	1	Label – Attach/Detach, Skid Steer
7	42392	1	Spring Guide – DS	22	59900	1	Label – Warning/Caution, Snowplow
8	42393	1	Spring Guide – PS	23	77704	1	Label – Logo, Center Moldboard
9	42396	2	Hinge Pin Kit	24	32593EN	4	Label – Warning, Multiple Pinch Points
10	42397	2	Spring Guide Pin Kit	25	29256	2	Label – Warning, Crush Hazard
11	42943	2	1/4 x 1 Coiled Spring Pin	ns	84643	1	Blade Label Kit, SPEEDWING (items 21–25)
12	42395	4	Bumper Kit				
13	84652	1	Wing – DS	26	77706	1	Label – Logo, SPEEDWING Wing DS
14	84653	1	Wing – PS	ns	77707	1	Label – Logo, SPEEDWING Wing PS
15	43528	2	Wear Strip – Wing Top	ns	77728	1	Label Kit, SPEEDWING Wings (both sides)
16	42383	1	Wing Cutting Edge Kit (DS & PS)				
Item 2			**84462 Moldboard Cutting Edge Kit**				
–		1	1/2" Cutting Edge 8600SW	3	41774	1	Bolt Bag – Moldboard Cutting Edge
Item 3			**41774 Bolt Bag – Moldboard Cutting Edge**				
27		8	5/8-11 x 2-1/2 Carriage Bolt G5	29		8	5/8-11 Hex Locknut GB
28		8	5/8 Hardened Flat Washer				
Item 4			**53595 Plow Shoe Assembly**				
30	53596	1	Disc Shoe	32	91192	34	Flat Washer, Special
31	60045	2	1-1/8 ID, 1-5/8 OD x 1-1/2 Spacer	33		2	7/16 x 1-3/4 Linchpin
Item 9			**42396 Hinge Pin Kit**				
34	42727	1	1 x 10-1/4 Hinge Pin	36		2	3/8-16 Hex Locknut GB
35		2	3/8-16 x 1-1/2 Hex Cap Screw G5				
Item 16			**42383 Wing Cutting Edge Kit (DS & PS)**				
–		2	Cutting Edge – SW Wing	17	84684	1	Wing Cutting Edge Hardware Kit
Item 17			**84684 Wing Cutting Edge Hardware Kit**				
28		6	5/8 Hardened Flat Washer	37		6	5/8-11 x 2 Carriage Bolt G5
29		6	5/8-11 Hex Locknut GB				
Item 18			**84525 24" Blade Guide Assembly**				
38		4	5/16-18 x 1 Hex Cap Screw G5	39		4	5/16-18 Hex Locknut GB
			ns = not shown				G = Grade

* Accessory only.

Blade Components – SPEEDWING

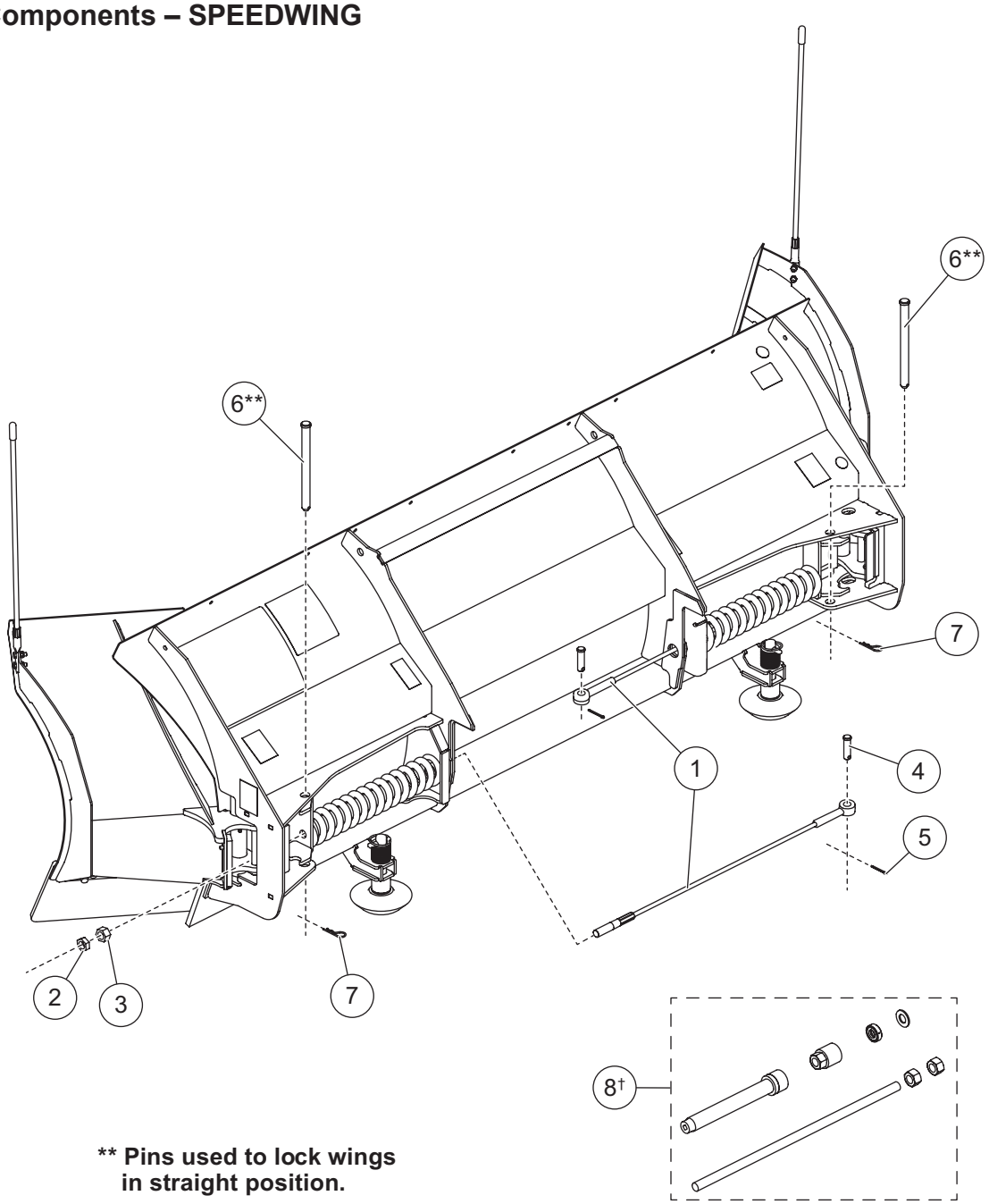

**** Pins used to lock wings in straight position.**

Blade Components – SPEEDWING							
Item	**Part**	**Qty**	**Description**	**Item**	**Part**	**Qty**	**Description**
1	42389	2	Cable Assembly w/Hardware (incl. items 2–5)	5	90601	2	1/4 x 1-1/2 Cotter Pin
				6	42738	2	3/4 x 9 Clevis Pin
2	B61615	2	3/4-10 Hex Jam Nut	7	91962	2	1/8 Hairpin Cotter
3	B61343	2	3/4-10 Hex Nut	8†	69780	–	Wing Spring Removal Tool
4	B61563	2	0.625 x 2.33 Clevis Pin				

† Service tool.

Quadrant Components

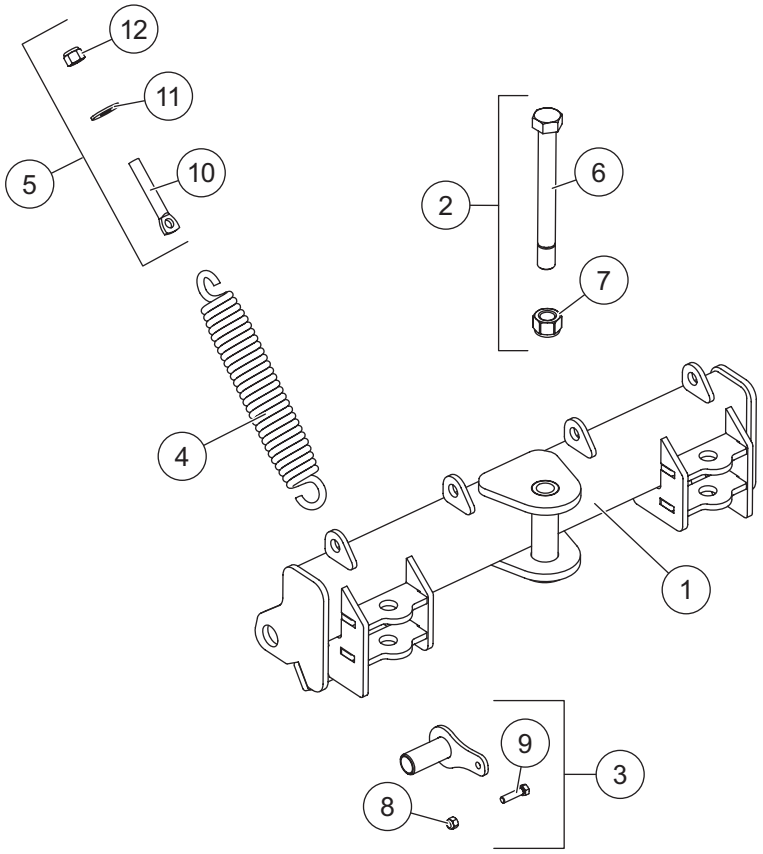

Quadrant Components – SPEEDWING							
Item	**Part**	**Qty**	**Description**	**Item**	**Part**	**Qty**	**Description**
1	84577	1	Quadrant – SW	4	23039	4	Trip Spring
2	49768	1	Pivot Bolt Kit	5	83990	4	Trip Spring Eyebolt Kit
3	42388	2	Pivot Bushing Kit				
Item 2			**49768 Pivot Bolt Kit**				
6		1	1-8 x 9 Hex Cap Screw G5 Special	7		1	1-8 Hex Locknut GB
Item 3			**42388 Pivot Bushing Kit**				
8		2	3/8-16 Hex Locknut GB	9		2	3/8-16 x 1-1/2 Hex Cap Screw G5
Item 5			**83990 Trip Spring Eyebolt Kit**				
10		4	5/8-11 x 4 Eyebolt G2	12		4	5/8-11 Hex Locknut GB
11		4	5/8 Hardened Flat Washer				
G = Grade							

Blade Components – HD

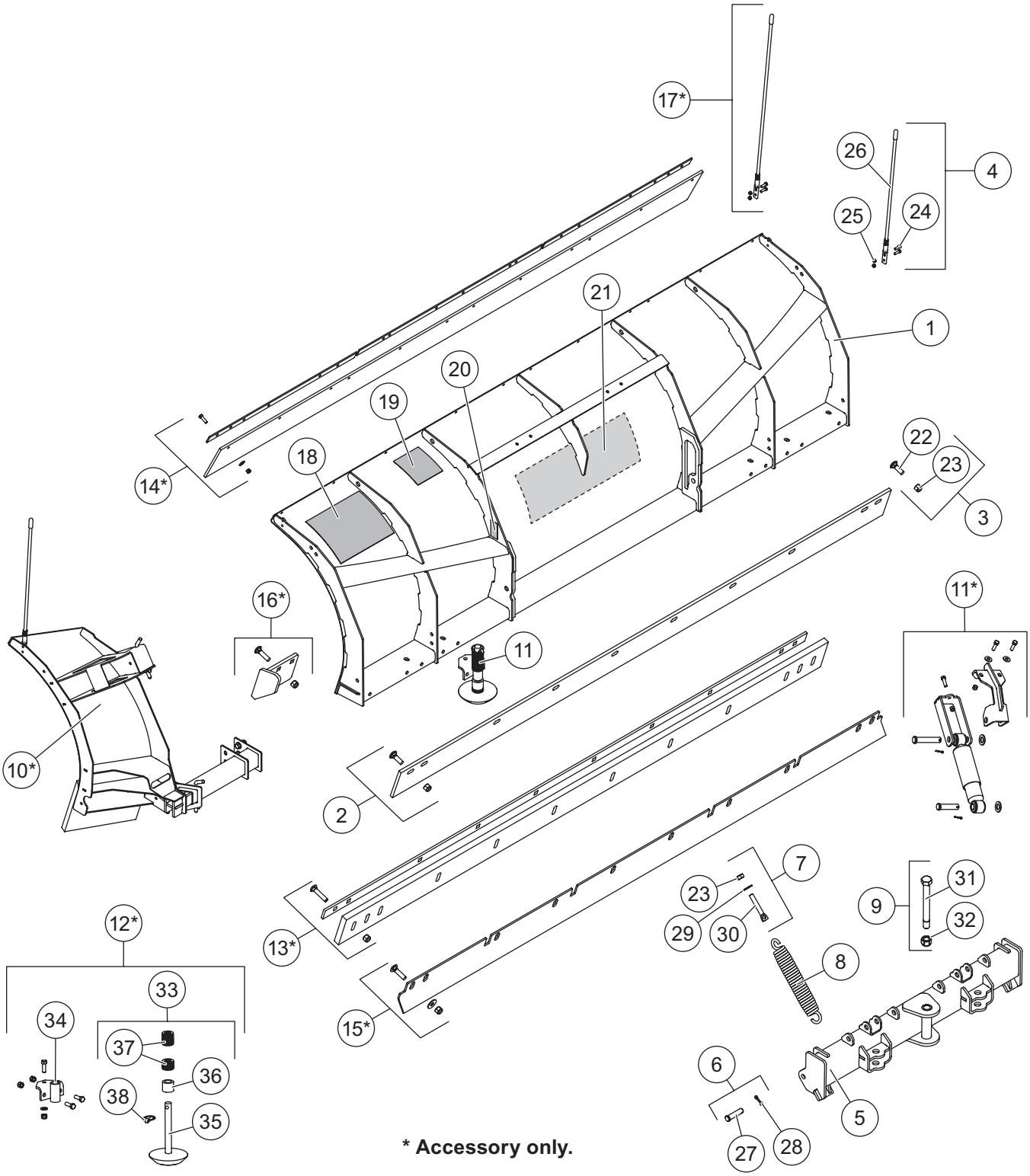

77720-1/77725-1/77730-1/77735-1 Blade Components							
Item	**Part**	**Qty**	**Description**	**Item**	**Part**	**Qty**	**Description**
1	84567-1	1	7600HD Blade w/Labels	13*	84530	1	Rubber Cutting Edge Kit – 7.5'
	84566-1	1	8000HD Blade w/Labels		84531	1	Rubber Cutting Edge Kit – 8'
	84565-1	1	8600HD Blade w/Labels		84532	1	Rubber Cutting Edge Kit – 8.5'
	84564-1	1	9000HD Blade w/Labels		84533	1	Rubber Cutting Edge Kit – 9'
2	40695	1	1/2" Steel Cutting Edge Kit – 7600HD	14*	84514	1	Rubber Deflector Kit – 7.5'
	40696	1	1/2" Steel Cutting Edge Kit – 8000HD		84517	1	Rubber Deflector Kit – 8', 8.5', 9'
	40697	1	1/2" Steel Cutting Edge Kit – 8600HD	15*	84463	1	Back Drag Edge – 7.5'
	40698	1	1/2" Steel Cutting Edge Kit – 9000HD		84464	1	Back Drag Edge – 8'
3	48765	1	Cutting Edge Bolt Bag HD		84466	1	Back Drag Edge – 8.5'
4	84525	1	24" Blade Guide Kit (set of 2)		84465	1	Back Drag Edge – 9'
5	84576	1	Quadrant HD	16*	43885	1	Curb Guard Kit
6	41123	2	3/4 x 3 Clevis Pin Kit w/Cotter	17*	84477	1	36" Poly Blade Guide Kit (set of 2)
7	84702	4	Eyebolt Kit	18	84718	1	Label – Attach/Detach, Skid Steer
8	23039	4	Trip Spring	19	59900	1	Label – Warning/Caution, Snowplow
9	41119	1	Pivot Bolt Kit – HD Skid Steer	20	29256	4	Label – Warning, Foot Crush Hazard
10*	84575	1	Accessory Wing Kit – HD	21	77703	1	Label – Identity, HD Blade Center
11*‡	84563	1	Accessory Shock Absorber Kit (set of 2)	ns	84642	1	Blade Label Kit, HD (items 18–21)
12*	84506-1	1	Shoe Assembly Kit				
Item 2			**40695/40696/40697/40698 1/2" Steel Cutting Edge Kit**				
		1	1/2" Steel Cutting Edge	3	48765	1	Cutting Edge Bolt Bag
Item 3			**48765 Cutting Edge Bolt Bag HD**				
22		10	5/8-11 x 2 Carriage Bolt G5	23		10	5/8-11 Hex Locknut GB
Item 4			**84525 24" Blade Guide Kit**				
24		4	5/16-18 x 1 Hex Cap Screw G5	26		2	24" Poly Blade Guide w/Label
25		4	5/16-18 Hex Locknut GB				
Item 6			**41123 3/4 x 3 Clevis Pin Kit with Cotter**				
27		2	3/4 x 3 Clevis Pin	28		2	1/4 x 1-1/2 Cotter Pin
Item 7			**84702 Eyebolt Kit**				
23		1	5/8-11 Hex Locknut GB	30		1	5/8-11 x 4 Eyebolt
29		1	5/8 Hardened Flat Washer				
Item 9			**41119 Pivot Bolt Kit – HD Skid Steer**				
31		1	1-8 x 9-1/2 Hex Cap Screw G5 Special	32		1	1-8 Hex Locknut G5 Special
Item 12*			**84506 Shoe Assembly Kit**				
33	42301	2	Disc Shoe Assembly	ns	84732	1	Bolt Bag – 84506 Shoe Assembly
34	84376	2	Shoe Bracket				
Item 33			**42301 Disc Shoe Assembly**				
35	60217	2	Disc Shoe	37	91192	52	Round Flat Washer, Special
36	60045	2	Spacer	38	93010	2	7/16 x 1-3/4 Linchpin
ns			**84642 Blade Label Kit, HD**				
18	84718	1	Label – Attach/Detach, Skid Steer	20	29256	4	Label – Warning, Foot Crush Hazard
19	59900	1	Label – Warning/Caution, Snowplow	21	77703	1	Label – Identity, HD Blade Center
			ns = not shown				G = Grade

* Accessory only.

‡ Fits only blades with serial number beginning 160209 or higher.

A-Frame Components

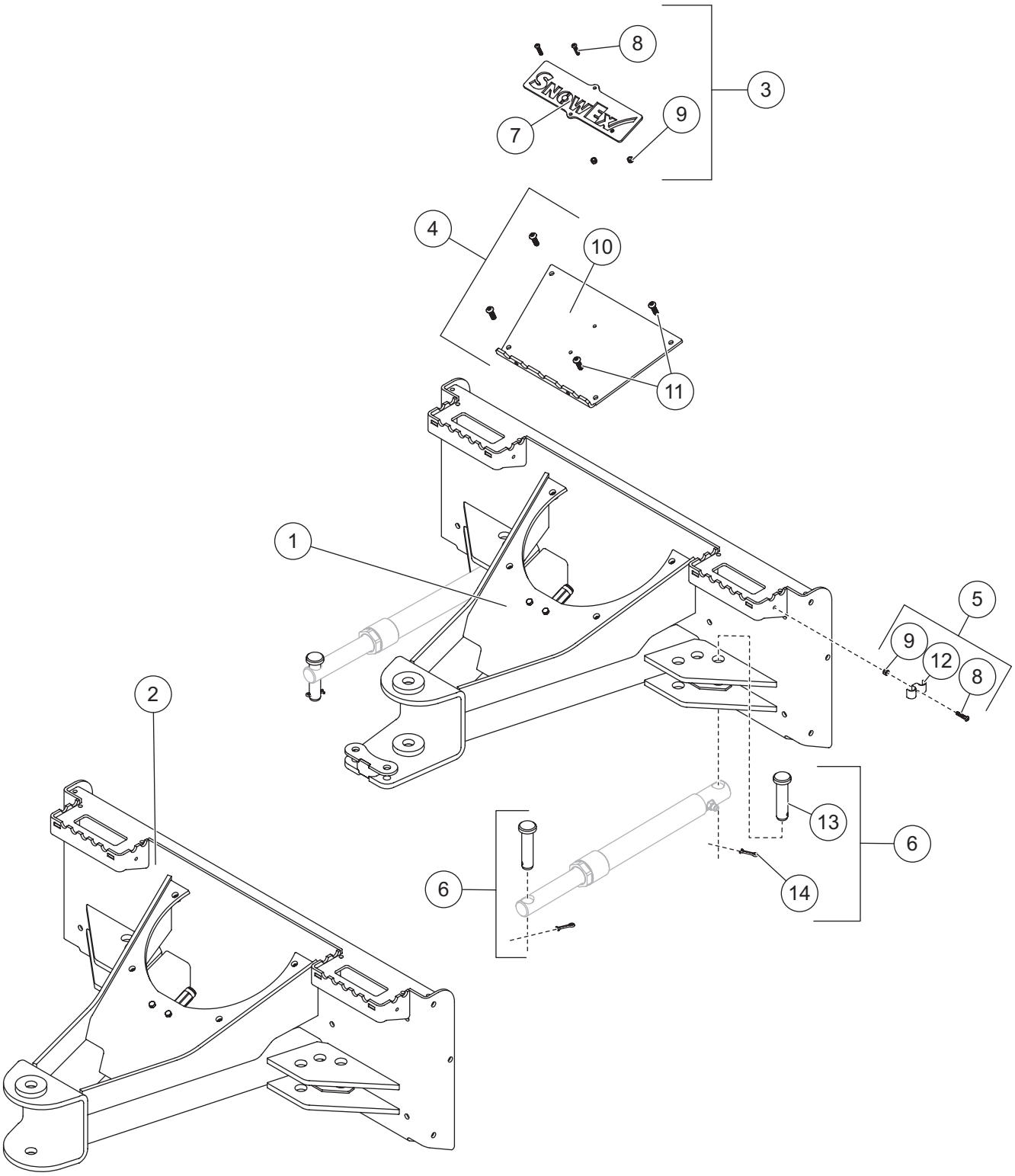

SKID STEER – A-FRAME COMPONENTS

A-Frame Components							
Item	**Part**	**Qty**	**Description**	**Item**	**Part**	**Qty**	**Description**
1	84735	1	A-Frame – SPEEDWING™	5	57890	1	Hose Clamp Kit
2	84730	1	A-Frame – HD Straight Blade	6	57968	4	1 x 4 Clevis Pin Kit
3	84710	1	SnowEx® Logo Plate Kit	ns	57989	1	Label – Information, Hydraulic Guide, Skid Steer
4	57978	1	A-Frame Cover Kit				
Item 3			**84710 SnowEx Logo Plate Kit**				
7		1	Logo Plate – SnowEx	9		2	1/4-20 Hex Locknut
8		2	1/4-20 x 1-1/4 Button-Head Cap Screw SS				
Item 4			**57978 A-Frame Cover Kit**				
10		1	Step Plate	11		4	3/8-16 x 1-1/4 Button-Head Screw
Item 5			**57890 Hose Clamp Kit**				
8		1	1/4-20 x 1-1/4 Button-Head Cap Screw SS	9		1	1/4-20 Hex Locknut
				12		1	Double Hose Bracket
Item 6			**57968 1 x 4 Clevis Pin Kit**				
13		1	1 x 4 Clevis Pin	14		1	1/4 x 1-1/2 Cotter Pin
ns = not shown				SS = Stainless Steel			

For hydraulic relief manifold and fittings, see Hydraulic Components page.

Angle Ram Components

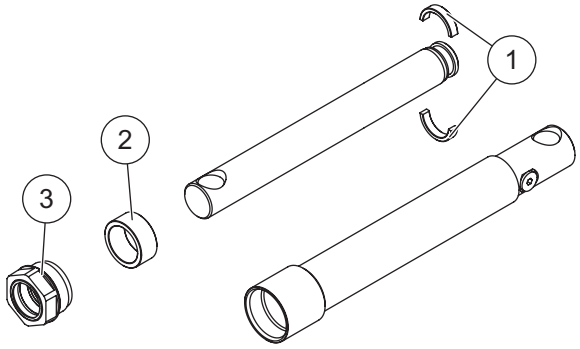

100259 Angle Ram Assembly 1-1/2 x 12 (Black) 84421* Angle Ram Assembly 1-1/2 x 12 (Red)							
Item	**Part**	**Qty**	**Description**	**Item**	**Part**	**Qty**	**Description**
1	57879	1	Split Bearing Kit 1-1/2 (2 bearings)	3	48985	1	Gland Nut Assembly
2	56537	1	Spacer				

* Discontinued

Hydraulic Components

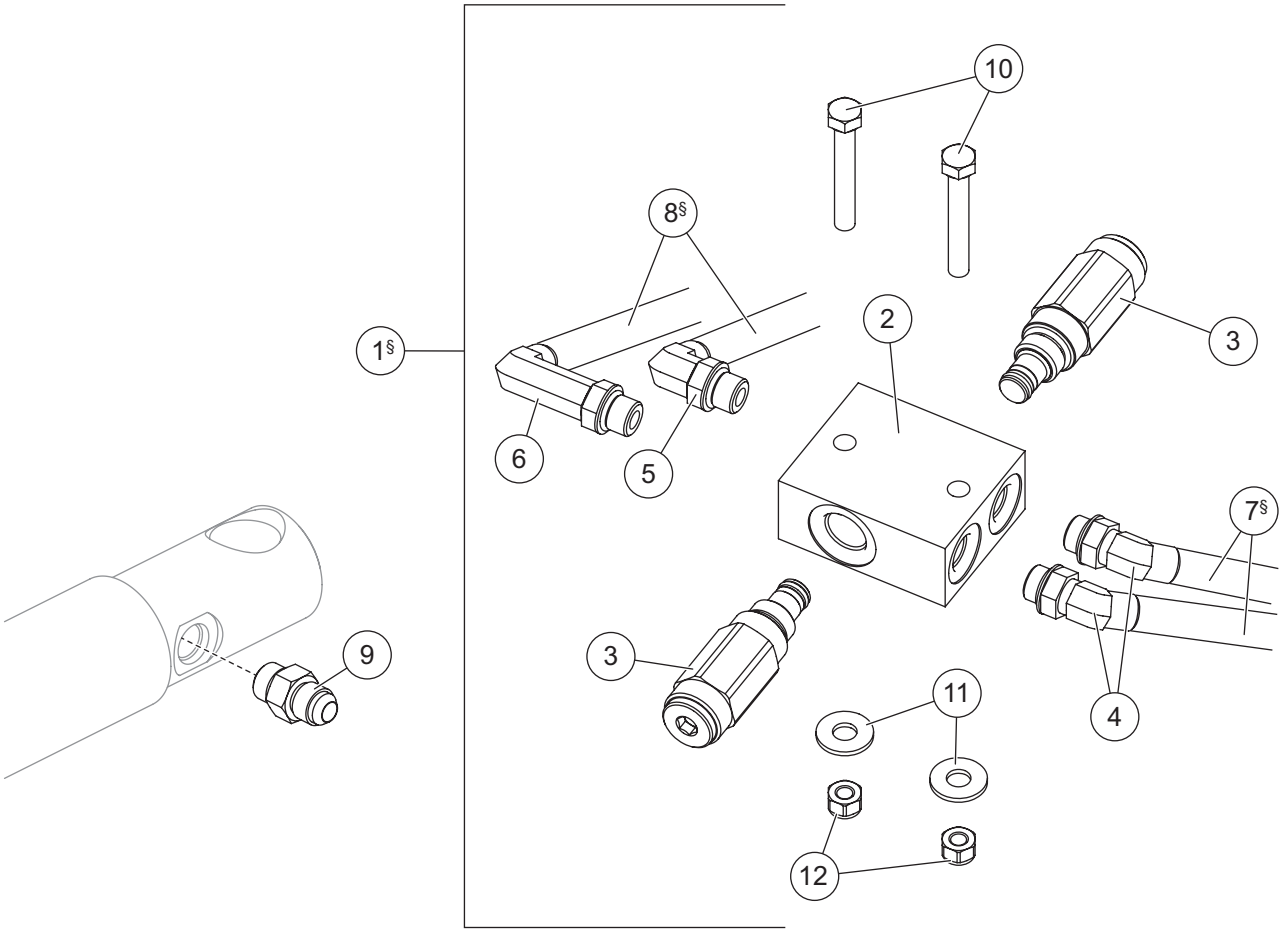

Hydraulic Components							
Item	**Part**	**Qty**	**Description**	**Item**	**Part**	**Qty**	**Description**
1§	57982	1	Relief Manifold w/Valves, Fittings & Hardware	6	40572	1	Elbow, Extra Long 90° –6 M JIC/ –6 M ORB
2	57984	1	Relief Manifold	7§	57965	2	Hose, 3/8 x 84 w/F JIC Ends
3	57895	2	Relief Valve, 3300 psi	8§	49496	2	Hose, 3/8 x 42 w/F JIC Ends
4	57877	2	Elbow, Special 45° –6 M JIC/ –6 M ORB	ns	57983	1	Hardware Bag
				ns	57893	1	1/2 Coupler Set (accessory only)
5	40571	1	Elbow, 90° –6 M JIC/–6 M ORB	9	B60007	2	Connector, Short –6 M JIC/ –6 M ORB
57983 Hardware Bag							
10		2	5/16-18 x 2-1/4 Hex Cap Screw G5	12		2	5/16-18 Hex Locknut
11		2	5/16 Flat Washer				
F = Female			M = Male	ns = not shown			G = Grade

§ Hoses not included in item 1.

TrynEx International
531 Ajax Drive
Madison Heights, MI 48071-2429
www.snowexproducts.com

A DIVISION OF DOUGLAS DYNAMICS, LLC

Copyright © 2026 Douglas Dynamics, LLC. All rights reserved. This material may not be used, reproduced, or copied in any manner, in whole or in part, in any printed, mechanical, electronic, film, or other distribution and storage media, nor analyzed or manipulated in any manner for the purpose of training artificial intelligence technologies or systems, without the written consent of TrynEx International, LLC. In accordance with Article 4(3) of the Digital Single Market Directive 2019/790, TrynEx International expressly reserves this work from the text and data mining exception. Authorization to photocopy items for internal or personal use by TrynEx International outlets or equipment owner is granted.

TrynEx International reserves the right under its product improvement policy to change construction or design details and furnish equipment when so altered without reference to illustrations or specifications used. TrynEx International or the vehicle manufacturer may require or recommend optional equipment for snow removal. Do not exceed vehicle ratings with a snowplow. TrynEx International offers a limited warranty for all equipment and accessories. See separately printed page for this important information. The following are registered (®) or unregistered (™) trademarks of Douglas Dynamics, LLC: SPEEDWING™, SnowEx®.

Printed in U.S.A.